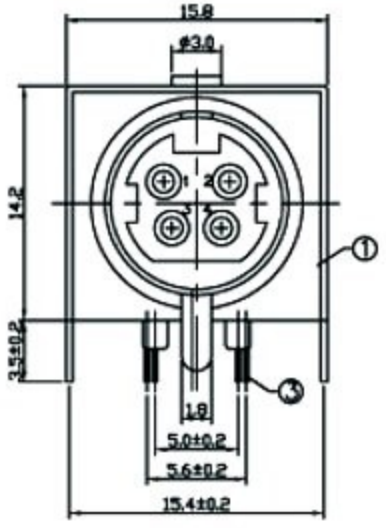

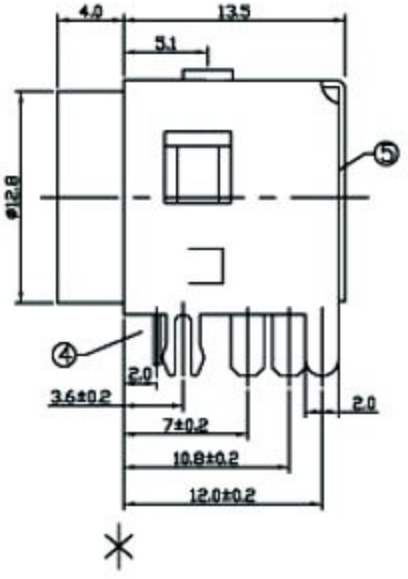

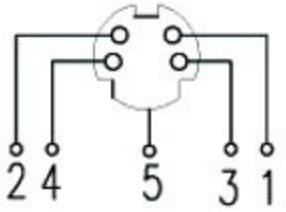

SCHEMATIC DIAGRAM

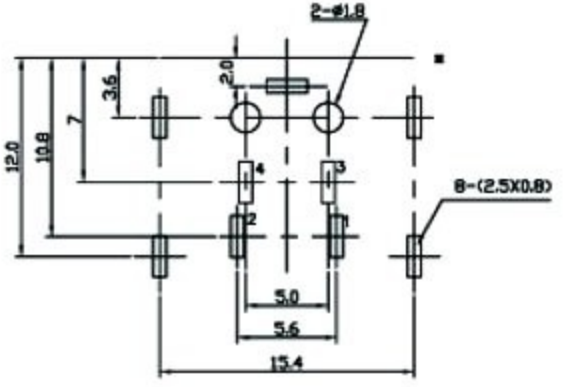

T:1.6 Dimensions of PC board holes
Tolerance : ±0.1(Printed- Top view)

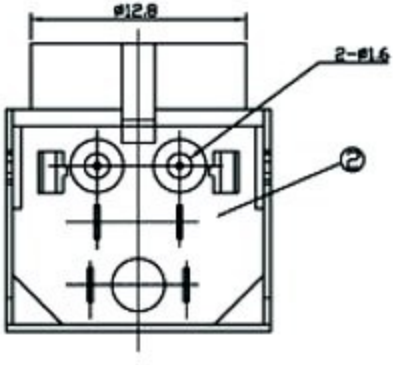

LEAD FREE

LTR	PART NAME	QTY	MATERIAL(THICK,COLOR)	REMARK
5	COAT	1	SPCC t=0.4	MB:Cu Cu/Sn PLATED
4	CONTACT FOOT	1	C2680 t=0.4	MB:Cu Cu/Sn PLATED
3	SPRING	4	C2680 t=0.3	MB:Cu Ag PLATED
2	COVER	1	PBT 4815	UL-94V-0
1	HOUSING	1	PBT 4815	UL-94V-0

UNLESS OTHERWISE SPECIFIED, TOLERANCE ON DECIMAL: ±0.3

UNIT	mm			Seconn International Enterprise Co., Ltd.	
TOLERANCES				TITLE	
±0.3				S Jack	
DRAWN		DATE		PART NO.	JAKS-S09038-4
SCALE		SIZE	A4	SHEET 1/1	REV