变更日期	变更内容	变更单编号	版本

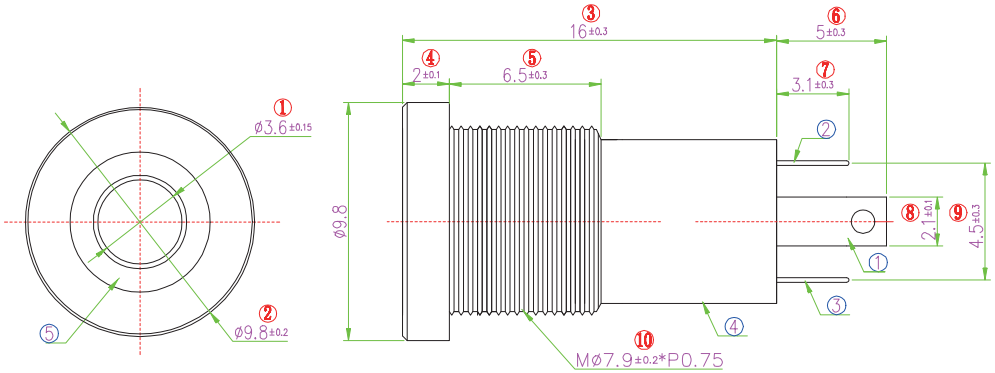

NUT

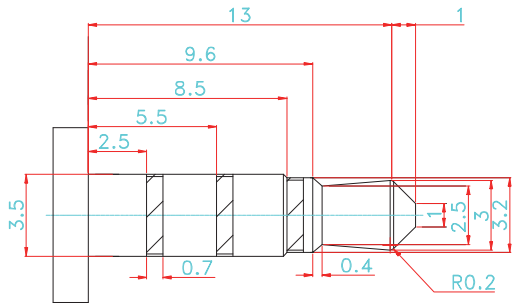

P.C.B.LAYOUT TOP VIEW

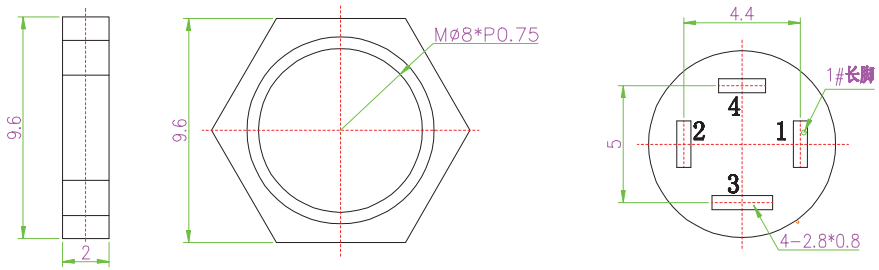

Specifications:

1. Mate Force:2.94~29.4N(0.3~3.0kgf)
2. Unmate Force: 2.94~29.4N(0.3~3.0kgf)
3. Contact Resistance: 50 milliohms MAX
4. Insulation Resistance: 100 Mega ohms DC500V
5. Dielectric Withstanding Voltage: 500 V AC 1min
6. Life Cycle: 5000 Cycles 10~20 Cycles/min
7. Voltage Rating: 12V DC 1A
8. Operating Temperature: -25℃~85℃

CIRCUIT DIAGRAM

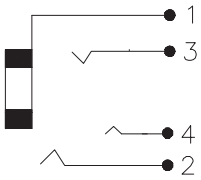

Matching Plug

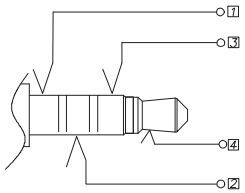

Serial No	Drawing No	Item	Q'ty	Material	Plating/Color
6	GD-DJ-3292A-06	BASE	1PCS	PBT(BLACK)	BLACK
5	GD-DJ-3292A-05	SLEEVE	1PCS	65H BRASS=Ø9	GOLD PLATING
4	GD-DJ-3292A-04	PIN 4	1PCS	C5191 PB=0.25	SILVER PLATING
3	GD-DJ-3292A-03	PIN 3	1PCS	C5191 PB=0.25	SILVER PLATING
2	GD-DJ-3292A-02	PIN 2	1PCS	C5191 PB=0.25	GOLD PLATING
1	GD-DJ-3292A-01	PIN 1	1PCS	C5191 PB=0.25	SILVER PLATING

Seconn International Enterprise Co., Ltd.

TOLERANCES			PROJECTION	TITLE			
x. = ± 0.40 x.x = ± 0.20 x.xx = ± 0.10 x.xxx = ± 0.05	Angle ± 1.0°		UNIT mm	3.5mm 4 Pole Power Jack Connector			
DRAWN	MIKE	DATE	2021/01/15	PART NO.	JAKO-S210115		
SCALE	1:1	SIZE	A4	SHEET	1/1	REV	A0